LA-13821-MS

Approved for public release;
distribution is unlimited.

Characterization Well R-9i Completion Report

Los Alamos
NATIONAL LABORATORY

Los Alamos National Laboratory is operated by the University of California
for the United States Department of Energy under contract W-7405-ENG-36.

Produced by the Environmental Restoration Project,
Groundwater Investigations Focus Area

Cover photo shows a modified Foremost Dual Rotary (DR-24) drill rig. The DR-24 is one of several drill-rig types being used for drilling, well installation, and well development in support of the Los Alamos National Laboratory Hydrogeologic Workplan. The Hydrogeologic Workplan is jointly funded by the Environmental Restoration Project and Defense Programs to characterize groundwater flow beneath the 43-square-mile area of the Laboratory and to assess the impact of Laboratory activities on groundwater quality. The centerpiece of the Hydrogeologic Workplan is the installation of up to 32 deep wells in the regional aquifer.

An Affirmative Action/Equal Opportunity Employer

This report was prepared as an account of work sponsored by an agency of the United States Government. Neither The Regents of the University of California, the United States Government nor any agency thereof, nor any of their employees, makes any warranty, express or implied, or assumes any legal liability or responsibility for the accuracy, completeness, or usefulness of any information, apparatus, product, or process disclosed, or represents that its use would not infringe privately owned rights. Reference herein to any specific commercial product, process, or service by trade name, trademark, manufacturer, or otherwise, does not necessarily constitute or imply its endorsement, recommendation, or favoring by The Regents of the University of California, the United States Government, or any agency thereof. The views and opinions of authors expressed herein do not necessarily state or reflect those of The Regents of the University of California, the United States Government, or any agency thereof. Los Alamos National Laboratory strongly supports academic freedom and a researcher's right to publish; as an institution, however, the Laboratory does not endorse the viewpoint of a publication or guarantee its technical correctness.

LA-13821-MS

Issued: May 2001

Characterization Well R-9i Completion Report

David Broxton
David Vaniman
William Stone
Steve McLin
Mark Everett
Andy Crowder

Los Alamos
NATIONAL LABORATORY
Los Alamos, New Mexico 87545

TABLE OF CONTENTS

1.0 INTRODUCTION 1

2.0 SUMMARY OF DRILLING ACTIVITIES 1

2.1 Equipment 1
2.2 Schedule 1
2.3 Production 1
2.3.1 Open-Borehole Drilling 3
2.3.2 Core Drilling 3
2.3.3 Casing Advancement 3
2.3.4 Other Drilling Activities 3

3.0 GEOLOGY 4

3.1 Alluvium 4
3.2 Cerros del Rio Basaltic Rocks 4
3.2.1 Upper Tholeiite 4
3.2.2 Lower Tholeiite 5
3.2.3 Upper Alkalic Basalt 5
3.2.4 Lower Alkalic Basalt and Basaltic Tephra 5
3.3 Older Alluvium 6

4.0 HYDROLOGY 6

4.1 Groundwater Occurrence 6
4.2 Hydrologic Testing 6

5.0 WASTE MANAGEMENT 7

6.0 SURVEY ACTIVITIES 8

6.1 Geodetic Survey 8
6.2 Surface Radiological Survey 8

7.0 WELL DESIGN, CONSTRUCTION, AND DEVELOPMENT, AND WESTBAY INSTALLATION 8

7.1 Well Design 8
7.2 Well Construction 9
7.3 Well Development 9
7.4 Installation of Westbay MP55 System® 9
7.5 Wellhead Protection 14

8.0 SITE RESTORATION 14

9.0 SUMMARY OF SIGNIFICANT RESULTS 14

10.0 ACKNOWLEDGMENTS 14

11.0 REFERENCES 16

Appendixes

Appendix A Lithologic Log

Appendix B Westbay's MP55 Well Components Installed in R-9i

List of Figures

Figure 1.0-1 Locations of R-9i, existing water supply wells and test wells, and generalized water-level contours for the regional aquifer 2
Figure 7.2-1 As-built well completion diagram of well R-9i 11
Figure 7.3-1 R-9i well development, screen #1 11
Figure 7.3-2 R-9i well development, screen #2 and sump 11
Figure 7.5-1 Well R-9i wellhead diagram 15

List of Tables

Table 2.3-1 Performance Statistics for Characterization Well R-9i 3
Table 4.2-1 Summary of Data for Hydrologic Testing of Materials Containing Perched Water at R-9i 7
Table 6.1-1 Geodetic Data for Well R-9i 8
Table 7.1-1 Planned and Actual Screen Placements in Well R-9i 8
Table 7.4-1 Depths of Key Items, R-9i MP55 Completion 13

List of Acronyms and Abbreviations

DR	dual rotation
ER	environmental restoration
I.D.	inside diameter
NTU	nephelometric turbidity unit
QA	quality assurance
TD	total depth
UDR	underground drill rig
WCSF	waste characterization strategy form

Metric to English Conversions

Multiply SI (Metric) Unit	by	To Obtain US Customary Unit
kilometers (km)	0.622	miles (mi)
kilometers (km)	3281	feet (ft)
meters (m)	3.281	feet (ft)
meters (m)	39.37	inches (in.)
centimeters (cm)	0.03281	feet (ft)
centimeters (cm)	0.394	inches (in.)
millimeters (mm)	0.0394	inches (in.)
micrometers or microns (µm)	0.0000394	inches (in.)
square kilometers (km^2)	0.3861	square miles (mi^2)
hectares (ha)	2.5	acres
square meters (m^2)	10.764	square feet (ft^2)
cubic meters (m^3)	35.31	cubic feet (ft^3)
kilograms (kg)	2.2046	pounds (lb)
grams (g)	0.0353	ounces (oz)
grams per cubic centimeter (g/cm^3)	62.422	pounds per cubic foot (lb/ft^3)
milligrams per kilogram (mg/kg)	1	parts per million (ppm)
micrograms per gram (µg/g)	1	parts per million (ppm)
liters (L)	0.26	gallons (gal.)
milligrams per liter (mg/L)	1	parts per million (ppm)
degrees Celsius (°C)	9/5 + 32	degrees Fahrenheit (°F)

CHARACTERIZATION WELL R-9i REPORT

by

David Broxton, David Vaniman, William Stone, Steve McLin, Mark Everett, Andy Crowder

ABSTRACT

Characterization well R-9i is located near the eastern boundary of Los Alamos National Laboratory (the Laboratory) in Los Alamos Canyon. R-9i is designed to characterize temporal variations in water quality and water levels for the two uppermost intermediate-depth perched groundwater zones at this location. R-9i is a companion well to regional aquifer characterization well R-9, located 35 ft to the east. R-9i was funded by the Laboratory's Environmental Restoration Project and satisfies requirements of the work plan for Los Alamos and Pueblo Canyons (LANL 1995, 50290) and the Laboratory's "Hydrogeologic Workplan" (LANL 1998, 59599).

R-9i was drilled by open-hole rotary methods to a depth of 322 ft in March 2000. A nominal 5-in.-inside diameter and 5.5-in.-outside diameter stainless-steel well containing two wire-wrapped screens at 189.1 to 199.5 ft and 269.6 to 280.3 ft was installed in March 2000. The well was developed and then tested for hydraulic properties. A Westbay® Instruments, Inc., MP55 System® monitoring system was installed in April 2000.

The principal geologic units encountered in R-9i, in descending order, consist of alluvium, basalts of the Cerros del Rio volcanic field and basaltic tephra, and older alluvium. Two zones of perched saturation were anticipated in the Cerros del Rio basalt based on characterization data from well R-9 which had been drilled earlier. Water first appeared in the borehole at a depth of 186 ft. The water rose to a level of 141 ft, similar to the behavior observed during the drilling of R-9. This may indicate either confined conditions or that saturated conditions extend below 141 ft, but water-producing fractures were not intercepted above 186-ft depth. Straddle-packer/injection testing of materials in the two screened intervals yielded preliminary hydraulic conductivity values of 37.07 (screen #1) and 0.79 (screen #2) ft/day.

1.0 INTRODUCTION

This report describes the drilling, well construction and development, and testing activities for characterization well R-9i. R-9i is located near the eastern boundary of Los Alamos National Laboratory (the Laboratory) in Los Alamos Canyon (Figure 1.0-1). R-9i was drilled to a depth of 322 ft, and it contains two screens that can be sampled individually. This well was installed by the Environmental Restoration (ER) Project by the Canyons and Groundwater Investigations Focus Areas to satisfy requirements of the work plan for Los Alamos and Pueblo Canyons (LANL 1995, 50290) and the Laboratory's hydrogeologic work plan (LANL 1998, 59599)

R-9i is primarily designed to provide water-quality and water-level data for the two uppermost perched zones of saturation identified during the drilling of characterization well R-9 (Broxton et al. 2000, 66599). R-9 was completed in the regional zone of saturation as a single-screen well in order to isolate Los Alamos County and Laboratory drinking-water supplies from perched zones that contained potential groundwater contaminants. R-9i, located 35 ft west of R-9, was installed as a companion well to R-9 to characterize temporal changes in water quality and water levels in the two uppermost intermediate-depth perched zones near the eastern Laboratory boundary.

2.0 SUMMARY OF DRILLING ACTIVITIES

R-9i was drilled to a total depth (TD) of 322 ft and completed with two screened intervals in zones of perched water.

2.1 Equipment

R-9i was drilled by Dynatec Environmental Drilling Company (Dynatec) using a Foremost dual rotation (DR)-24. Final well development, hydrologic testing, and installation of the Westbay® sampling system was completed using an underground drill rig (UDR). Dynatec provided three-man drilling crews, crew vehicles, drilling hammers and bits, a 7-in.-diameter dual-wall rod system, a 1-ton flatbed truck, and a 20-ton boom truck for handling casing, drill pipe, and heavy support apparatus such as casing jacks. The ER Project's field support facility provided drilling bits; a small front-end loader; the dust suppression system; and field-support trailers, including logging and sampling, water containment tanks, a Hermit data logger, depth-to-water meter, water-development bailers, pressure transducers, and a diesel-powered electric generator.

2.2 Schedule

The DR-24 drill rig was mobilized to R-9i on March 6, 2000, and it was demobilized on March 11, 2000, after installation of the stainless-steel well casing. The UDR was mobilized on April 5, 2000, and was demobilized on April 7, 2000. Drilling and well installation required 15 shifts.

Drilling shifts averaged 12 hr in duration, but varied slightly depending on production needs.

2.3 Production

Drilling of borehole R-9i began on March 6, 2000, and was completed on March 9, 2000. Drilling techniques used in R-9i consisted of open-borehole drilling and air-rotary, under-reamer emplacement of a surface casing. Production statistics are summarized in Table 2.3-1.

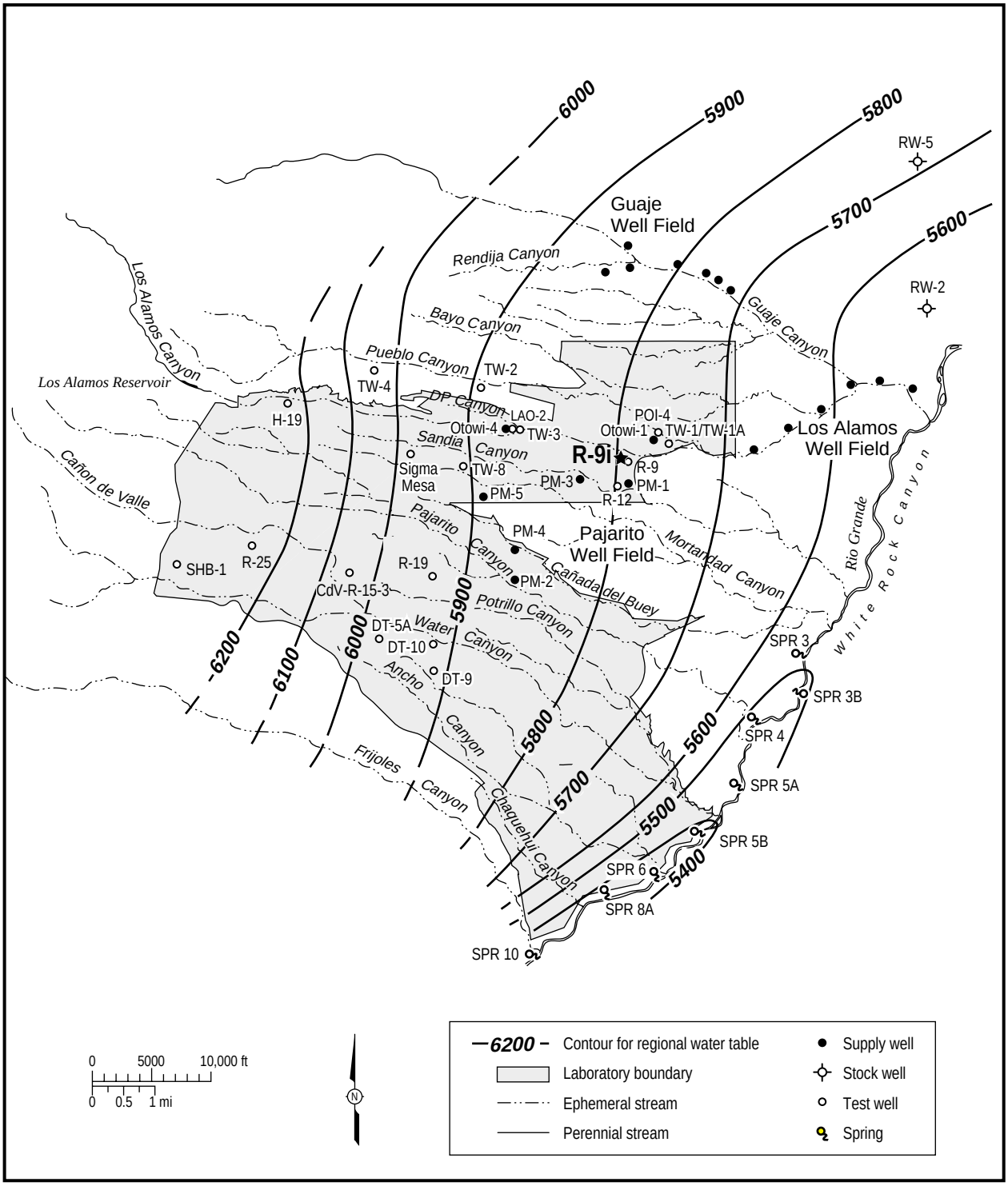

Source: Purtymun 1984, 6513.

F1.0-1 / R-9i WELL COMPLETION RPT / 082300 / PTM

Figure 1.0-1. Locations of R-9i, existing water supply wells and test wells, and generalized water-level contours for the regional aquifer

Table 2.3-1
Performance Statistics for Characterization Well R-9i

Drilling Types	Open Hole	13.375-in. Casing[a]	Casing-Advance System (7-in. rods)[b, c]	Total (ft)[d]
Total footage drilled (ft)	304	18	18	322
Total footage rate (ft/hr)[b]	35.9	6	6	34
Basalt footage (ft)[c]	272	8	8	280
Basalt rate (ft/hr)[b, c]	20.3			20
Puye clastics footage (ft)	32	0	0	32
Puye clastics rate (ft/hr)[b]	26.7			26.7
Trip-in footage (ft)	18	0	0	18
Trip-in rate (ft/hr)[b]	240			240
Trip-out footage (ft)	322	0	18	340
Trip-out rate (ft/hr)[b]	311.3			310

Note: Blank cells indicate no applicable data.

[a] Holte 13.375-in. casing-advance system used 7-in. reverse circulation rods.

[b] Rates are weighted averages over footages drilled or tripped, including breaks but excluding repairs and change-out of tools.

[c] Basalt footage and rate is for Cerros del Rio basalt.

[d] TD of borehole is 322 ft.

From the ground surface to 322 ft, the total footage drilled by the different drilling techniques and casing sizes was 340 ft. The total trip-in footage was 18 ft, and the total trip-out footage was 340 ft.

2.3.1 Open-Borehole Drilling

Open-borehole drilling was used to drill all but the 18 ft of surface casing. Dynatec drilled 272 ft of open borehole in basaltic rocks at an average rate of 20.3 ft/hr using a 12.25-in.-diameter tri-cone bit. Open-borehole drilling in sedimentary strata (old alluvium) was completed through 32 ft at a rate of 26.7 ft/hr.

2.3.2 Core Drilling

Since R-9 contained some characterization coring, no coring was attempted in R-9i.

2.3.3 Casing Advancement

The 13.375-in. casing-advance system was used to install 18 ft of 13.375-in. surface casing to a depth of 18 ft.

2.3.4 Other Drilling Activities

No other drilling activities were conducted at R-9i.

3.0 GEOLOGY

The principal geologic units encountered in R-9i, in descending order, consist of alluvium, basalts of the Cerros del Rio volcanic field and basaltic tephra, and older alluvium. Because detailed characterization of these units is provided by Broxton et al. (2000, 66599) for samples collected from drill hole R-9, just 35 ft east of R-9i, no samples of representative lithologies were collected from R-9i for further laboratory analysis. Cuttings samples from R-9i were examined in the field and a video log was run in the open hole from 0 to 200 ft. The descriptions provided in this report focus on lithologic features specific to those cuttings and video log. A lithologic log of geologic units encountered in R-9i is given in Appendix A.

3.1 Alluvium

Quaternary alluvium was penetrated from the surface to 10-ft depth at R-9i. The alluvium at this site consists predominantly of detritus from the Bandelier Tuff along with detritus contributed from other volcanic sources (Tschicoma Formation intermediate lavas and basalts of the Cerros del Rio volcanic field).

3.2 Cerros del Rio Basaltic Rocks

Basaltic rocks of the Cerros del Rio volcanic field at R-9i extend from the base of the alluvium (10-ft depth) to 282-ft depth. An 8-ft deposit of basaltic tephra (282- to 290-ft depth) occurs beneath the lowermost flow unit. The Cerros del Rio volcanic field is located principally to the east of the Laboratory, with most source vents located along or east of the present river channel of the Rio Grande. However, some source vents are known to be buried by Bandelier Tuff under the eastern part of the Pajarito Plateau; the tephra at the bottom of the Cerros del Rio lava flows in R-9 and R-9i may have been derived from a nearby vent.

The Cerros del Rio basalts in R-9 range in age from 2.15 to 2.45 Ma (Broxton et al. 2000, 66599). This range indicates multiple eruptive events that nevertheless are close enough in age to support hypotheses of genetic continuity.

Chemical and petrographic analyses of the Cerros del Rio lavas in R-9 define a sequence of four compositional groups, in descending sequence: upper tholeiite, lower tholeiite, upper alkalic basalt, and lower alkalic basalt. Each group is assumed to represent a separate eruption of basalt, although some geochemical trends indicate a genetic relationship between all four groups. The proximity of R-9 and the excellent correspondence between predicted and as-encountered stratigraphy at R-9i indicate that the same units occur in R-9i. Details of chemical, mineralogic, and petrographic character of the Cerros del Rio basaltic rocks in R-9 are provided in Broxton et al. (2000, 66599). This document provides additional features specific to the hand-sample analysis of R-9i cuttings. Because depths to contacts between the four Cerros del Rio flow units at R-9 are defined by a more extensive data set, including open-hole geophysical logs unavailable at R-9i, the same contacts are extrapolated to R-9i except where evidence from the cuttings at R-9i suggest minor differences.

3.2.1 Upper Tholeiite (10- to 120-ft depth)

In R-9i the upper part of the upper tholeiite, to 25-ft depth, is a pale-gray aphyric basalt with small (~1 mm) vesicles. At 25 to 55 ft the basalt is olivine-porphyritic and vesicles become more prominent (up to 5 mm). Platy fragmentation and smaller vesicles extend from 45 ft to a clay-rich zone at 55- to 60-ft depth. The clays in this zone are orange in color and appear as bodies of ~0.5 cm that may have been vesicle fillings. The section from 60 to 105 ft lacks clay; this interval is olivine-porphyritic with common

vesicles of 1 to 5 mm. At 105-ft depth a pink/brown clay appears as laminar deposits on the vesicle walls; this clay zone persists to the base of the upper tholeiite.

Data from R-9 indicate that the upper tholeiite is relatively K-rich, relative to average tholeiitic compositions. Compared to the underlying flows, the upper tholeiite has the highest silica content and lowest Mg/(Mg+Fe) ratio. Both these parameters indicate significant evolution through fractional crystallization.

3.2.2 Lower Tholeiite (120- to 180-ft depth)

The top of the lower tholeiite in R-9i, from 120- to 130-ft depth, contains clay alteration similar to that of the lower 15 ft in the upper tholeiite, but the vesicle-lining clays are not as abundant. From the top of the lower tholeiite to ~140-ft depth the olivine phenocrysts are partially altered to iddingsite. From 140 ft to the base of the flow at 180 ft, the olivine phenocrysts are exceptionally fresh; these phenocrysts are relatively large (up to 2 mm) from 155-ft depth to the flow base. Cuttings from the lowermost 5 ft of the flow include indurated slabs of sand and clay, ~0.5-cm thick, that are probably fracture fillings from the flow base.

Data from R-9 indicate that the lower tholeiite is less evolved (higher in Mg#) than the upper tholeiite. As in R-9i, a thin zone with abundant clay defines the position of the lower contact with the upper alkalic flow.

3.2.3 Upper Alkalic Basalt (180- to 206-ft depth)

The upper alkalic basalt in R-9i contains more clay than any other Cerros del Rio basaltic lavas at this site. Clay is particularly abundant from 180- to 190-ft depth, in a zone of red scoria where olivine phenocrysts have iddingsite rims but unaltered cores. Iddingsite alteration of olivine phenocrysts diminishes below 190-ft depth. Clay abundance also diminishes in a thin interval at 190- to 195-ft depth, below the upper scoria zone, but clay increases in abundance at 195 to 206 ft. Throughout the interval from 180 to 206 ft the basalt is vesicular, with vesicles of 0.5 to 3 cm. Clay development is localized in the vesicles as laminar vesicle-wall coatings.

Analyses of samples from R-9 also showed that the sequence of upper alkalic lava, from 180- to 206-ft depth, contains abundant clay. Pervasive microfractures in the upper alkalic basalt may provide small-scale communication within the perched horizon that completely saturates the upper alkalic basalt. Data from R-9 indicate that the upper alkalic basalt is relatively K-poor for an alkalic basaltic lava. Compared to the bounding flows, this flow has intermediate contents of refractory elements such as Cr and of elements readily assimilated from crustal rocks, such as Ba, K, Rb, and Sr.

3.2.4 Lower Alkalic Basalt (206- to 282-ft depth) and Basaltic Tephra (282- to 290-ft depth)

The lower alkalic basalt in R-9i includes an upper vesicular zone with abundant clay to 210-ft depth. From 210 to 274 ft the lower alkalic basalt is massive to moderately vesicular, with little clay development except in fractures. Beginning at about 225- to 240-ft depth the cuttings produced are exceptionally fine-grained (predominantly sand-sized), indicating pervasive microfracturing that produces fine fragments during drilling. At 274- to 282-ft depth there is a prominent occurrence of clay-rich vesicular basalt with rounded basalt fragments several centimeters in diameter. This zone appears to mark a flow base, above 8 ft of basaltic tephra (282- to 290-ft depth).

Based on analysis of samples from R-9, the lower alkalic basalt has the highest contents of refractory elements such as Cr and Ni but the indicators of crustal assimilation (K_2O/P_2O_5) are similar in both alkalic basalts. The Mg# is considerably higher than in the upper alkalic basalt. This high Mg# indicates relatively little olivine fractionation in the lower alkalic basalt compared to the overlying basalts.

3.3 Older Alluvium (290 to TD at 323-ft depth)

Drill hole R-9i reached final depth within deposits of older alluvium (defined by Griggs [1964, 8795] as riverine deposits of unconsolidated sands and gravels deposited on pediment surfaces cut on the Puye Formation). Deposits of older alluvium at R-9i range from sands to gravels with clasts derived from a variety of basaltic and intermediate to rhyolitic volcanic lithologies; many of the latter are silicified. Basalts include quartz-bearing and non-quartz-bearing lithologies. The sand fraction of the older alluvium deposits includes detrital quartz as frosted and rounded grains up to 2 mm in diameter.

4.0 HYDROLOGY

Some information on the unsaturated zone beneath Los Alamos Canyon near the eastern Laboratory boundary was obtained at R-9 (Broxton et al. 2000, 66559; Stone 2000, 66781). Thus, hydrologic characterization at R-9i focused on two zones of perched saturation discovered but not screened in R-9. R-9i provided the opportunity to further assess the occurrence of this perched water as well as hydraulic properties of the materials containing it.

4.1 Groundwater Occurrence

Two zones of perched saturation were encountered in R-9i, as expected from observations at adjacent regional well R-9. The upper perched water lies within the Cerros del Rio basalt. The lower zone of perched saturation lies at the base of the Cerros del Rio basalt. Information about the first occurrence of groundwater and the static water-level depth for the lower perched water could not be determined because the lower zone was flooded by water from the upper perched zone during open-hole drilling.

The position of the top of the uppermost zone of perched saturation was not clearly understood at R-9. Thus, steps were taken at R-9i to resolve this. More specifically, minimal amounts of drilling fluid were used to avoid plugging any productive zones and operations were halted periodically to allow any formation water present to accumulate in the borehole. At such times water injection was ceased, but circulation of compressed air was allowed to continue. Drilling was stopped at depths of 140 ft, 145 ft, 148 ft, 155 ft, 160 ft, 168 ft, 175 ft, 180 ft, and 188 ft. At all these depths, except 188 ft, the hole dried out within 5 min, suggesting significant saturation had not yet been encountered. At a depth of 184 ft red-orange clay and red scoria showed up in the cuttings, and at 186 ft the driller noticed an increase in the penetration rate so ceased injecting water. While shut down at a depth of 188 ft, water was produced from the borehole. The top of the uppermost saturation is believed to lie at a depth of 186 ft, based on these observations. Drilling was continued until a depth of 200 ft was reached. Then the bit was pulled back to a depth of 187 ft, leaving 12 ft of open hole. After 1.5 hr, a composite water-level depth of 142 ft was obtained.

4.2 Hydrologic Testing

Straddle-packer/injection tests were attempted for both zones of perched saturation. A standard pumping test was also conducted for screen #1. Preliminary results are summarized in Table 4.2-1. A more detailed report on these tests is being prepared.

The injection test for screen #2 (lower zone: 270 to 280 ft) was run first. Material opposite screen #2 was of such low permeability that water injected at a rate of 11 gpm came up and out of the rod string in 2 min.

Table 4.2-1
Summary of Data for Hydrologic Testing of Materials Containing Perched Water at R-9i

Screen #	Depth (ft)	Static Water Level Depth (ft)	Injection Rate (gpm)	Volume Injected (gal.)	Test Duration (min)	Hydraulic Conductivity (ft/day)	Analytical Method
1	189–199	137	11	120	10	37.07	Bouwer-Rice
2	270–280	264	19	30	60	0.79	Bouwer-Rice

During the injection test for screen #1 (upper zone: 189 to 199 ft), water was injected at a rate of 19 gpm for 30 min. A hydraulic-conductivity value of 37.07 ft/day was calculated using the Bouwer-Rice method of analysis (Bouwer and Rice 1976, 64056).

In view of the poor performance of the material behind screen #2, it was reasoned that a pumping test of the well (open to both screens) would essentially yield information for screen #1. Therefore the well was pumped at a rate of 15 gpm for 5 hr and then was allowed to recover overnight. A preliminary value for transmissivity of 5-10 ft^2/day was indicated for the material behind screen #1.

5.0 WASTE MANAGEMENT

The waste generated during R-9i drilling activities included personal protective equipment, plastic sheeting, and miscellaneous waste. All waste streams were managed in accordance with the Laboratory-approved site-specific waste characterization strategy form (WCSF). Approximately 12 yd^3 of cuttings were generated from the drilling of R-9i. The cuttings were collected in 55-gal. drums, characterized based on the analytical results of drill cuttings from well R-9, and then incorporated into the surface soil during site restoration.

Drilling, well development, and hydrologic testing generated approximately 30,600 gal. of groundwater. Water generated was temporarily stored onsite in eleven 3000-gal. tanks, sampled, and discharged to the site in accordance with the WCSF and New Mexico Environment Department-approved Notice of Intent to discharge.

Decontamination water (less than 6 gal./day) was periodically generated from cleaning sampling and monitoring equipment (i.e., core tubes, bailers, water-level meter) onsite. This water was discharged to the site in accordance with “Decontamination Water Discharge Procedure: Containerized Decon Water” (LANL 1996, 58716) and the approved WCSF, based on visual observation and field screening. Large equipment and drill pipe were cleaned at Technical Area 50, as needed.

Miscellaneous waste included nitrile gloves, paper towels, plastic bags, and plastic sheeting. These materials were placed in a plastic drum liner and labeled with the well designation, generation dates, borehole depths, and contents. One 55-gal. drum liner of miscellaneous waste was generated during drilling. A waste profile form was prepared for this waste stream, and the miscellaneous waste was disposed of at the Los Alamos County landfill in accordance with the approved WCSF.

Plastic sheeting and sorbent pads used beneath the drill rig and heavy equipment were removed and reused at the succeeding well site.

6.0 SURVEY ACTIVITIES

6.1 Geodetic Survey

The location of R-9i was determined by geodetic survey on September 19, 2000, using a Wild/Leica TC1600 total station. The 1992/1993 Laboratory-wide control network provided survey control. The survey located the brass monument in the northwest corner of the well pad and the north side of top of well casing (Table 6.1-1). Horizontal well coordinates are based on New Mexico State Plane Grid Coordinates, Central Zone (North American Datum 83) and are expressed in feet. Elevation is expressed in feet above mean sea level using the National Geodetic Vertical Datum of 1929. The Facility for Information Management, Analysis, and Display (FIMAD) location identification number for R-9i is LA-10029.

Table 6.1-1
Geodetic Data for Well R-9i

	Northing (ft)	Easting (ft)	Elevation (ft)
Brass Monument	1770837.8	1648202.7	6383.2
Top of Casing	1770834.7	1648208.8	6383.85

6.2 Surface Radiological Survey

A surface radiological survey was conducted at the site prior to drilling R-9. Details of the radiological survey are given in Broxton et al. (2000, 66599).

7.0 WELL DESIGN, CONSTRUCTION, AND DEVELOPMENT, AND WESTBAY INSTALLATION

7.1 Well Design

Data from R-9, borehole cuttings, and drillers observations about the first appearance of saturation were reviewed to plan screen placements for well construction. The number and placement of screens was designed to sample the following:

- uppermost intermediate-depth perched groundwater (screen #1) that could be connected upgradient with surface water and alluvial groundwater in Los Alamos Canyon; and
- perched groundwater at the base of the Cerros del Rio basalt that contains elevated uranium concentrations (screen #2)

The planned and actual screen locations are given in Table 7.1-1. In the field implementation plan, screen #1 was originally designed to span the entire interval from the top of the static water level to the point where saturation was first recognized in the uppermost perched zone during the drilling of R-9 (see discussion in Section 4.1). However, because the R-9i borehole remained dry until a depth of 188 ft, the design was changed to ensure that screen #1 would be within the zone of saturation.

Table 7.1-1
Planned and Actual Screen Placements in Well R-9i

Screen #	Planned Depth (ft)	Actual Depth (ft)	Geologic/Hydrologic Setting
1	137–187	189.1–199.5	Top of large perched zone within Cerros del Rio basalt
2	270–280	269.6–280.3	Small perched zone at base of Cerros del Rio basalt

7.2 Well Construction

Well construction began on March 9, 2000, and was completed on March 11, 2000. Well R-9i was constructed of 5-in.-inside diameter (I.D.), 304 stainless steel, flush-threaded casing. It was designed and constructed with two screened intervals to monitor each of the perched saturated zones.

Screen #1 is positioned at a depth of 189.1 to 199.5 ft bgs and is located in the first perched groundwater zone. Screen #2 is located at a depth of 269.6 to 280.3 ft bgs in the second perched zone. Screens are constructed of 0.010-in. slot, 80-rod, wire-wrapped, 304 stainless steel. A 30-ft sump was installed below screen #2 to the bottom of the well to accommodate the Westbay multilevel sampling system. As constructed, the total depth of the well is 309.9 ft bgs. The as-built well completion drawing for R-9i is shown in Figure 7.2-1.

Annular fill materials were placed in the space between the well casing and the borehole wall using a tremie pipe consisting of 2 5/8-in.-I.D. drill rod (NQ). The tremie pipe provided accurate and efficient placement of annular seals and filter-pack materials. Bentonite annular seals were emplaced in the bottom of the borehole, between the screens, and between the surface seal and screen #1. Dry bentonite chips and pellets were emplaced through a tremie pipe using municipal water as a transport solution. The bentonite was then allowed to hydrate in the annulus after emplacement. Filter-pack sand also was emplaced with a tremie pipe using municipal water as a carrier. Calculated volumes of annular fill materials were installed and then measured using a wire-line sounder to determine the actual depths of the fill. The surface seal consists of a Portland Type I-II cement with 1% bentonite gel, by weight. The cement was pumped down a tremie pipe in slurry form. The tremie was retracted as the cement was emplaced.

7.3 Well Development

Well development was conducted on April 6 and 7, 2000. Well development methods involved bailing and pumping. Each screened interval was bailed using a 10.5-ft-long, 3-in.-I.D., stainless-steel, bottom-loading bailer operated on a wire line with a UDR-20 drill rig. The bailer serves to remove sediment from the bottom of the well and produces a surging action as it is lowered and retrieved past the screens. This produces a two-directional flow through the filter pack and formation, a process that develops and cleans the filter-pack materials and results in improved well performance. This process, along with purging, also reduces the physical and chemical effects of the drilling process on the formation. A total of 250 gal. of water was bailed from screen #1. Approximately 300 gal. was bailed from screen #2 and the sump, combined. Following bailing, a submersible pump was deployed and the well was pumped to purge the well and draw in fresh formation water, remove sediment, and reduce turbidity to less than 5 nephelometric turbidity units (NTUs). A total of 2850 gal. of water was pumped from screen #1 and 1615 gal. was pumped from screen #2, including the sump immediately below the screen. The pumping rate averaged approximately 25 gal./min. Turbidity in screen #1 was reduced from 11.3 NTUs to 2.7 NTUs during development. Turbidity in screen #2 was reduced from 3.0 to 2.6 NTUs. Turbidity values in NTUs with respect to volume of water pumped in gallons are shown in Figures 7.3-1 and 7.3-2.

7.4 Installation of Westbay MP55 System®

Following well development, the Westbay MP55 system for groundwater monitoring was installed in the steel-cased well. Model 2523 MOSDAX® System sampler probe equipment will be used to collect groundwater samples from the completed well.

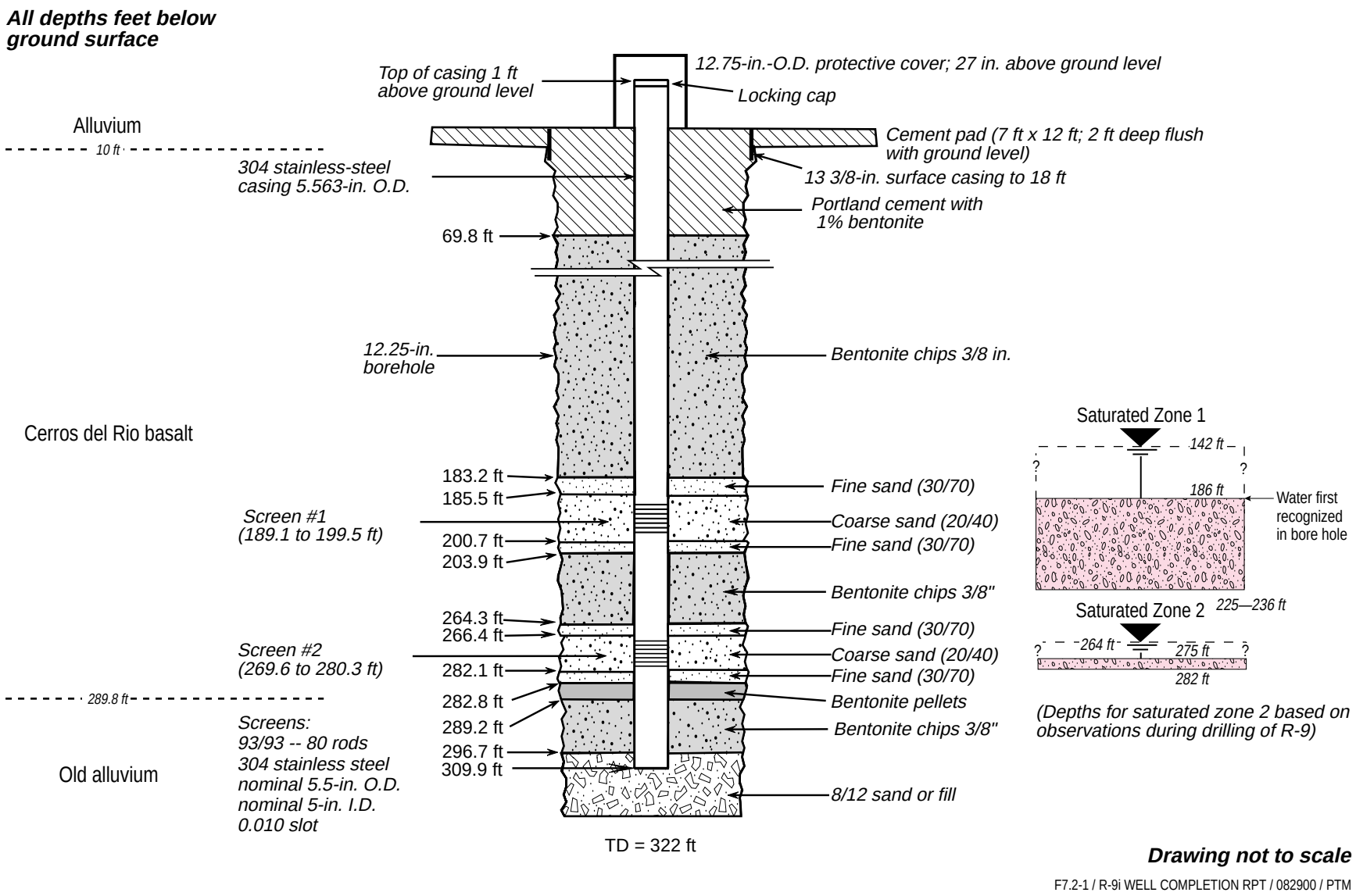

Figure 7.2-1. As-built well completion diagram of well R-9i

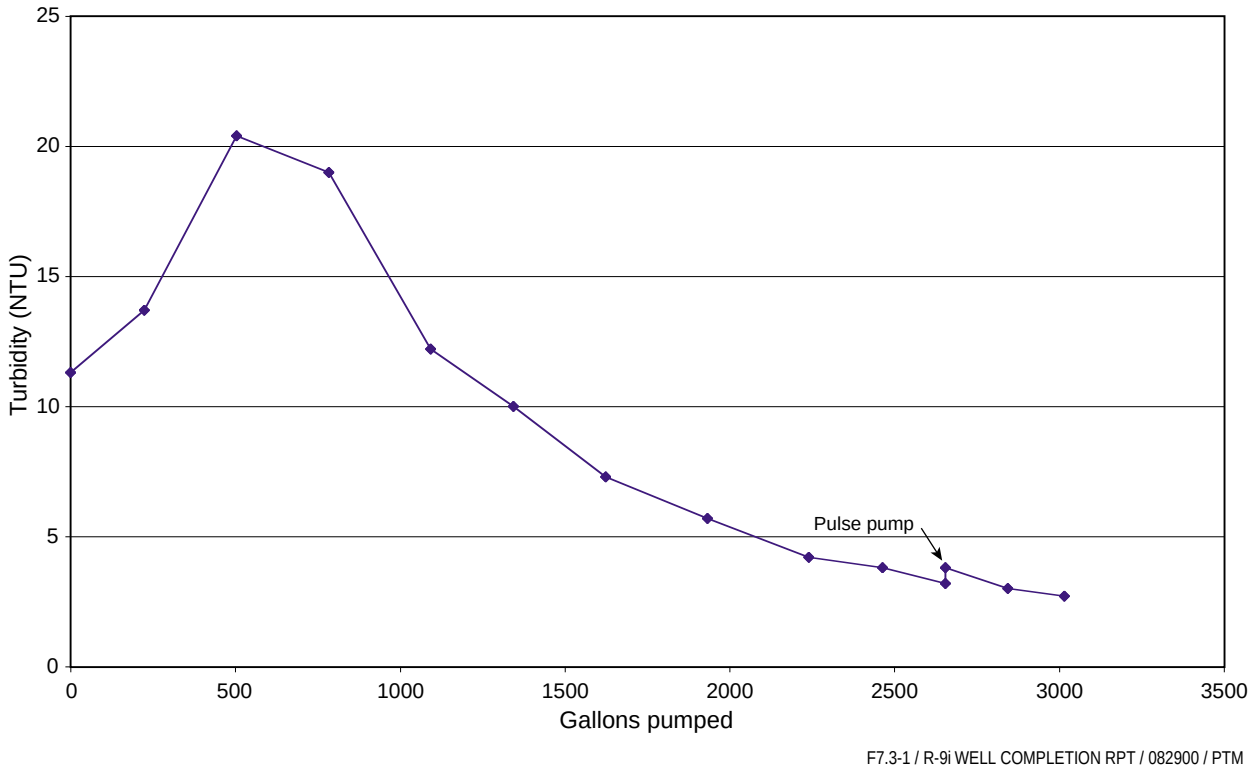

Figure 7.3-1. R-9i well development, screen #1

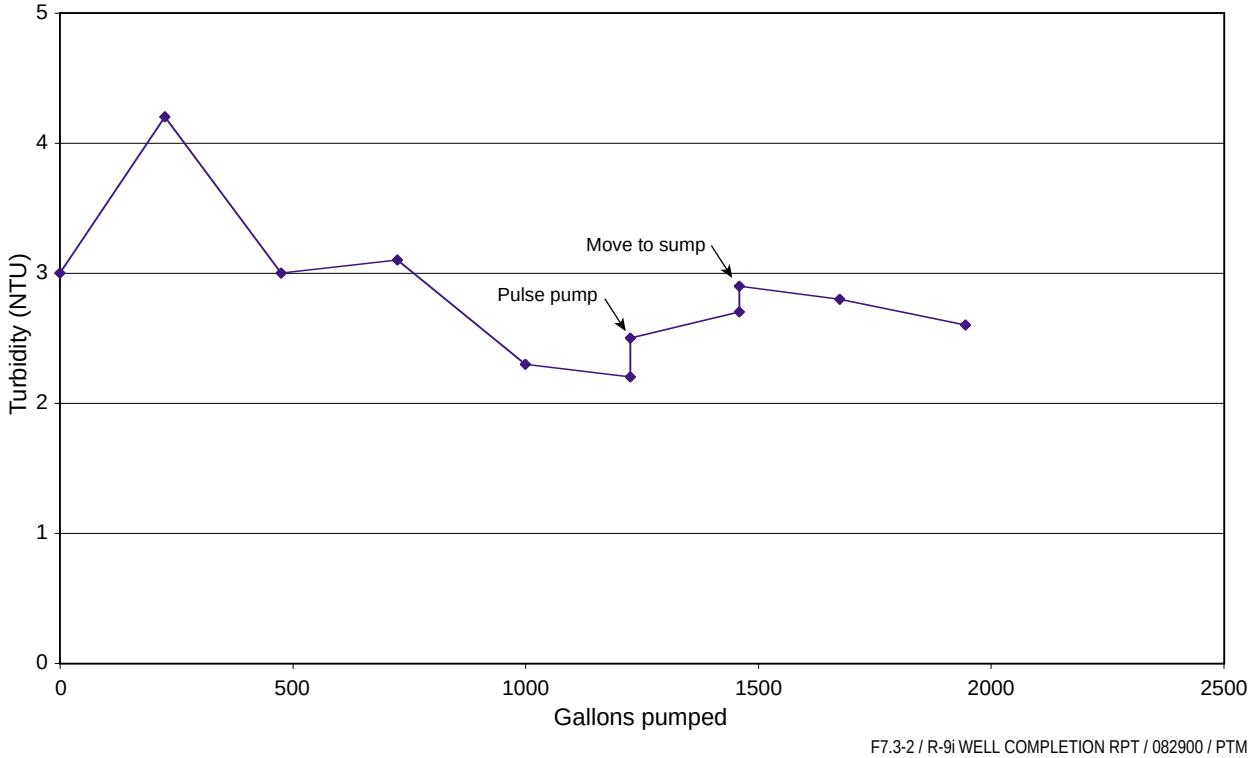

Figure 7.3-2. R-9i well development, screen #2 and sump

An MP casing installation log, which specifies the location of each Westbay well component in the borehole, was prepared in the field by Westbay in consultation with the Laboratory based on a draft of the well completion diagram. Available geophysics logs and an as-built video log taken inside the steel well casing were also reviewed prior to siting measurement ports and packers within the well-screen intervals. The final version of the MP casing installation log was approved in the field on April 13, 2000, by the Laboratory prior to installation of the Westbay well components. The MP casing installation log as approved was used as the installation guide in the field.

An MP measurement port coupling and associated magnetic location collar were included in each primary monitoring zone to provide the capability to measure fluid pressures and collect fluid samples. A pumping port coupling was also included in the two screened zones to provide purging, sampling, and hydraulic conductivity testing capabilities. Additional measurement port couplings were included below the pumping ports for monitoring hydraulic tests.

Measurement port couplings were included in quality assurance (QA) zones to provide QA testing capabilities. All measurement ports were positioned below each of the MP55 packers to permit routine operation of the squeeze relief venting with the MP55 packer inflation equipment during the inflation process.

The MP casing components were set out in sequence according to the MP casing installation log on racks near the borehole. Each casing length was numbered in order beginning with the lowermost as an aid in confirming the proper sequence of components. The appropriate MP system coupling was attached to each piece of MP casing. Magnetic location collars were attached 2.5 ft below the measurement ports in each of the monitoring zones and 2.5 ft below MP coupling No. 39 near the top of the well.

The length of each MP casing section was measured with a steel tape to confirm nominal lengths, and the data were entered on the MP casing installation log. Each casing component was visually inspected, and serial numbers for each packer, measurement port coupling, and pumping port coupling were recorded on the field copy of the MP casing installation log.

The MP casing components were lowered into the well in sequence. The sections of MP casing were lowered by a Smeal work-over rig provided by the Laboratory. Each casing joint was tested with a minimum internal pressure of 300 psi for one minute to confirm hydraulic seals. Deionized water was used for the joint tests. A record of each successful joint test and the placement of each casing component is on the field copy of the MP casing installation log. The suspended weight of the MP casing components was monitored during lowering to confirm that operating limits of the MP system casing components were not exceeded. Lowering of the MP casing to the target position was successfully completed on April 14, 2000.

After the casing was lowered into the borehole, the water level inside the MP casing was left at a depth of more than 251 ft below the top of the MP casing to confirm hydraulic integrity of the casing. The open-hole water level was 121.3 ft below ground level. With this differential pressure acting on the MP casing string, the water level inside the MP casing was essentially stable over night. The test indicated that the MP casing was watertight.

After the components were lowered into the well and the hydraulic integrity of the MP casing had been confirmed, the MP casing string was positioned as shown in Appendix B. The MP packers were inflated on April 15, 2000, using deionized water. The packers were inflated in sequence beginning with the lowermost. All of the packers were inflated successfully and QA tests showed that all of the packer valves were closed and sealed.

The final tensile load at the top of the MP casing was 250 lb. The maximum limit for long-term tensile loading of the MP casing is 1000 lb (454 kg). Therefore Westbay's standard procedure for destressing the MP casing was not required. A sketch of the as-built top of the MP casing and final positions of the MP well components are shown in Appendix B. A summary of depth information for key MP well components is shown on Table 7.4-1.

Table 7.4-1
Depths of Key Items, R-9i MP55 Completion

Zone No.	Screen Interval[a] (ft)	Sand Pack Interval[a] (ft)	MP Casing No. (from MP Log)	Packer No.	Packer Serial No. (0612)	Nominal Packer Position[b] (ft)	Magnetic Collar Depth (ft)	Measurement Port Depth[b] (ft)	Pumping Port Depth[b] (ft)	Port Name
			23	1	069	164.7				
SQA1	Blank		22				None	169.2	None	SQA1
			21	2	070	174.5				
Zone 1	189.1 to 199.5	183.2 to 203.9	18				196.3	198.8		MP1A
			17						204.1	PP1
			16					209.8		MP1B
			15	3	075	213.5				
LQA1	Blank		14				None	218.0	None	SQA2
			10	4	072	244.7				
SQA2	Blank		9					249.2	None	LQA2
			8	5						
Zone 2	269.6 to 280.0	264.3 to 282.8	5		076		281.3	278.8		MP2A
			4			254.5			284.1	PP2
			3				None	289.8		MP2B
			2	6	071	293.5				
LQA2	Blank		1				None	298.0	None	LQA2

Note: Blank cells indicate no applicable data.

[a] All depths are with respect to ground level.

[b] All depths of MP system casing components are the depth to the top of the respective coupling.

After packer inflation was completed, fluid pressures were measured at each measurement port. The fluid pressure profile measurements were taken on April 17, 2000. At that time, the in situ formation pressures may not have recovered from the preinstallation and installation activities. Longer-term monitoring may be required to establish representative fluid pressures.

A plot of the piezometric levels in all zones, including QA zones, based on the April 17, 2000, pressure measurements were examined to confirm proper operation of the measurement ports and to check for the presence of annulus seals between adjacent monitoring zones. All of the measurement ports operated normally. Each packer was supporting a differential hydraulic pressure, indicating the presence of packer seals.

7.5 Wellhead Protection

A reinforced concrete vault was installed to provide wellhead protection. Figure 7.5-1 shows plan and profile views of the wellhead configuration.

8.0 SITE RESTORATION

The R-9i drill site area was recontoured to match the surrounding topography using a backhoe. The surface of the drill pad was roughened and native dryland seed was applied to the denuded areas. Straw mulch was then spread over the seeded areas and wheel-rolled to crimp in the straw and cover the seed.

9.0 SUMMARY OF SIGNIFICANT RESULTS

The borehole for characterization well R-9i was drilled by open-hole rotary methods to a TD of 322 ft from March 6, 2000, to March 9, 2000. The geology and hydrology encountered during drilling of R-9i was the same as that at R-9, 35 ft to the east. A 5-in.-I.D. stainless-steel well with two sire-wrapped well screens at 189.1 to 189.5 ft and 269.6 to 280.3 ft was installed from March 9, 2000, to March 11, 2000. Development and hydraulic testing of the two well screens took place from April 5, 2000, to April 7, 2000. The Westbay MP55 system for groundwater monitoring was installed on April 14, 2000, and April 15, 2000.

10.0 ACKNOWLEDGMENTS

The following individuals contributed to this investigation.

B. Hull was the drilling consultant, and he contributed to drilling activities, placement of annular fill materials, and well design.

Dynatec Drilling, Inc. provided drilling services under the direction of J. Eddy, the drilling supervisor. The drillers consisted of D. Wilson and G. Woodward.

D. Frank provided field support during drilling.

R. Baran and D. Barney were the site safety officers.

S. Bolivar and J. Skalski provided contract oversight for drilling activities and field support. L. Martinez and Joel Duran provided technical support for drilling activities and field support.

D. Larssen installed the Westbay Instruments, Inc., sampling system.

R. Bohn provided support and oversight for waste management.

The groundwater integration team, led by C. Nylander, participated in the planning and evaluation of data collected during this investigation.

G. Turner provided US Department of Energy oversight during the investigation.

J. Young of the New Mexico Environment Department provided regulatory oversight during drilling operations.

A. Lee, T. Ball, C. Ladelfe, and H. Wheeler-Benson were reviewers for the document.

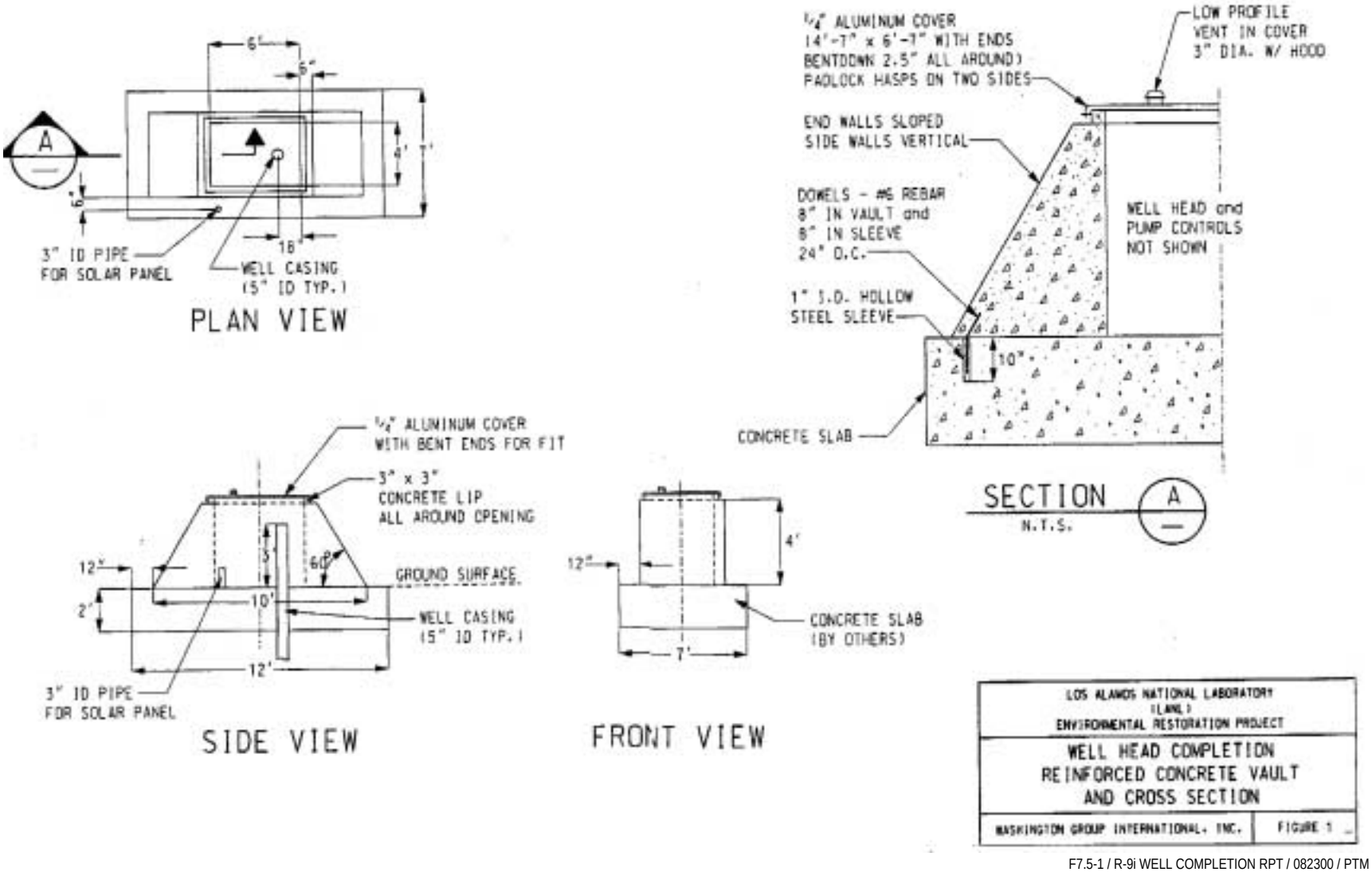

Figure 7.5-1. Well R-9i wellhead diagram

The geodetic survey was performed by Bill Kopp of ESH-19.

J. Torline was editor for this document; P. Maestas was compositor.

A. Pratt and D. Daymon supported all phases of this investigation as leaders of the Canyons and Groundwater Investigations Focus Areas, respectively.

11.0 REFERENCES

Bouwer, H. and R. C. Rice, 1976. “A Slug Test for Determining Hydraulic Conductivity of Unconfined Aquifers with Completely or Partially Penetrating Wells,” *Water Resources Research,* Vol. 12, pp. 423–428. (Bouwer and Rice 1976, 64056)

Broxton, D. E., R. Gilkeson, P. Longmire, J. Marin, R. Warren, D. Vaniman, A. Crowder, B. Newman, B. Lowry, D. Rogers, W. Stone, S. McLin, G. WoldeGabriel, D. Daymon, and D. Wycoff, August 2000. “Characterization Well R-9 Completion Report,” Los Alamos National Laboratory Report LA-UR-00-4120, Los Alamos, New Mexico. (Broxton et al. 2000, 66599)

Griggs, R. L., 1964. “Geology and Ground-Water Resources of the Los Alamos Area New Mexico,” with a section on Quality of Water by John D. Hem, US Geological Survey Water-Supply Paper 1753, Washington, DC. (Griggs 1964, 8795)

LANL (Los Alamos National Laboratory), November 1995. “Task/Site Work Plan for Operable Unit 1049: Los Alamos Canyon and Pueblo Canyon,” Los Alamos National Laboratory Report LA-UR-95-2053, Los Alamos, New Mexico. (LANL 1995, 50290)

LANL (Los Alamos National Laboratory), February 13, 1996. “Decontamination Water Discharge Procedure: Containerized Decon Water,” ESH-18 Policy, Revision 1, Los Alamos, New Mexico. (LANL 1996, 58716)

LANL (Los Alamos National Laboratory), 1998. "Hydrogeologic Workplan," Los Alamos National Laboratory report, Los Alamos, New Mexico. (LANL 1998, 59599)

Purtymun, W. D., January 1984. “Hydrologic Characteristics of the Main Aquifer in the Los Alamos Area: Development of Ground Water Supplies,” Los Alamos National Laboratory Report LA-9957-MS, Los Alamos, New Mexico. (Purtymun 1984, 6513)

Stone, W. J., August 2000. “Laboratory-Derived Hydraulic Properties of Selected Materials from Wells R-9, R-12, and R-25,” Los Alamos National Laboratory Report LA-UR-00-3587, Los Alamos, New Mexico. (Stone 2000, 66781)

Appendix A

Lithologic Log

Cerros del Rio basalt; upper tholeiite (10- to 120-ft depth)

20 to 25 ft: Pale gray microvesicular and aphyric basalt.

25 to 30 ft: Black microporphyritic, microvesicular olivine basalt.

30 to 35 ft: Vesicles in olivine basalt more abundant and larger in size, up to ~5 mm.

35 to 40 ft: Vesicles in olivine basalt increase to ~1 cm in size and comprise ~40% of the rock volume; vesicles are lined by brown coatings of possible vapor-phase minerals.

40 to 45 ft: No recovery.

45 to 50 ft: Dense, microvesicular olivine basalt. Cuttings in this interval occur as platelets ~1 cm in diameter and a few mm thick, in contrast to the cm-scale equant cuttings from overlying intervals.

50 to 55 ft: No recovery.

55 to 60 ft: Olivine basalt with ~20% vesicles; vesicles up to ~1 cm in diameter. Cuttings equant, not platy. Cuttings include aggregates of orange clay, ~0.5 cm in diameter, that probably were vesicle fillings.

60 to 80 ft: Olivine basalt with coarser olivine phenocrysts (up to ~1 mm), smaller vesicles or nonvesicular, and no clay.

80 to 85 ft: Olivine basalt with ~20% vesicles; vesicles up to ~3 mm in diameter. In contrast to fresh olivine phenocrysts in overlying intervals, olivine phenocrysts have rims of iddingsite alteration.

85 to 105 ft: Olivine basalt with variable content (2% to 25%) of vesicles of 1 to 5 mm; olivine phenocrysts are unaltered.

105 to 115 ft: Olivine basalt, highly vesicular (>30% vesicles) with evidence of vesicles larger than size of cuttings (~1 cm). Vesicle walls coated by laminar deposits of pale brown clay; clay penetrates small fractures.

115 to 120 ft: Olivine basalt, vesicular, with vesicles <1 cm in diameter. Pale brown clay aggregates among cuttings represent probable vesicle fillings.

Cerros del Rio basalt; lower tholeiite (120- to 180-ft depth)

120 to 130 ft: Transition into massive olivine basalt with unaltered olivine phenocrysts. Basalt contains ~5% vesicles, up to 5 mm in diameter.

130 to 150 ft: Olivine basalt, microporphyritic and microvesicular. Olivine phenocrysts <0.5 to 1 mm; vesicles <3 mm. Slight iddingsite alteration of olivine phenocrysts.

150 to 160 ft: Olivine basalt, microvesicular; olivine phenocrysts increase in size to ~2 mm with depth.

160 to 175 ft: Olivine basalt, microvesicular, with olivine phenocrysts of 1 to 2 mm.

175 to 180 ft: Olivine basalt, microvesicular, with olivine phenocrysts of ~2 mm; cuttings include slabs of indurated sandy clay ~5-mm thick that probably represent fracture fillings.

Cerros del Rio basalt; upper alkalic basalt (180- to 206-ft depth)

180 to 185 ft: Scoriaceous olivine basalt with ~20% vesicles; evidence of vesicles larger than size of cuttings (~1 cm). Olivine phenocrysts have iddingsite rims. Vesicle walls are coated by laminar deposits of pale brown clay.

185 to 190 ft: Scoriaceous olivine basalt with unaltered olivine phenocrysts. Pale brown clay bodies up to 1 cm in diameter probably represent vesicle fillings.

190 to 195 ft: Cuttings include large fragments of coarse-vesicular olivine basalt, with vesicles up to 3 cm in diameter containing little clay. Olivine phenocrysts have slight iddingsite alteration.

195 to 200 ft: Scoriaceous olivine basalt with vesicles of ~1 cm. Olivine phenocrysts have little iddingsite alteration. Vesicle walls are coated by laminar deposits of pale brown clay

200 to 206 ft: Olivine basalt with ~10% vesicles up to 5 mm in diameter. Unaltered olivine phenocrysts. Abundant pale brown clay bodies probably represent vesicle fillings.

Cerros del Rio basalt; lower alkalic basalt (206- to 282-ft depth)

206 to 210 ft: Vesicular olivine basalt; vesicles commonly >1 cm in diameter. Vesicle walls are coated by laminar deposits of pale brown clay.

210 to 215 ft: Massive olivine basalt; clay persists as aggregates and in fractures, but in lower abundance than found at 195- to 210-ft depth.

215 to 240 ft: Massive to moderately vesicular olivine basalt. Unaltered olivine phenocrysts of ~1 mm. Clay persists as aggregates and in fractures.

240 to 245 ft: Cuttings in this interval are exceptionally fine-grained, equivalent to coarse sand. Olivine basalt with unaltered olivine phenocrysts. Clay persists in moderate abundance.

245 to 274 ft: Cuttings in this interval remain exceptionally fine-grained, equivalent to coarse sand. Olivine basalt with unaltered olivine phenocrysts and rare clay.

274 to 282 ft: Vesicular olivine basalt, with clay aggregates of >1 cm. Some basalt fragments several cm in diameter are rounded, with weathered rims, indicating flow-base rubble.

Cerros del Rio basalt; basaltic tephra (282- to 290-ft depth)

282 to 285 ft: Fine-grained cuttings of basaltic tephra; weathered and oxidized surfaces.

285 to 290 ft: No recovery.

Old alluvium (290-ft depth to total depth at 322-ft depth)

290 to 295 ft: Predominantly basaltic detritus, with rare grains of sand-size quartz and fine-grained silicic volcanic rocks.

295 to 320 ft: Sand to gravel with fragments of olivine basalt, quartz-bearing olivine basalt, and a variety of silicified volcanic lithologies. Quartz sand grains up to ~2 mm are common.

Appendix B

Westbay's MP55 Well Components Installed in R-9i

Summary Casing Log

Company: LANL
Well: R9i
Site:
Project: Hydrogeology Characterization

Job No: WB777
Author: DL

Well Information

Reference Datum: ground level
Elevation of Datum: msl
MP Casing Top: 0.00 ft.
MP Casing Length: 308.36 ft.
Well Description:
Plastic MP55 System
Other References:
5.0 in ID SS casing+screens: LANL3/15/00
Backfill: LANL 3/15/00
MagneticCollars 2.5 ft below port top

Borehole Depth: 323.00 ft.
Borehole Inclination: vertical
Borehole Diameter: 12.25 in.

File Information

File Name: 777_R9I.WWD
Report Date: Tue Aug 08 12:19:42 2000

File Date: Apr 16 07:50:17 2000

Sketch of Wellhead Completion

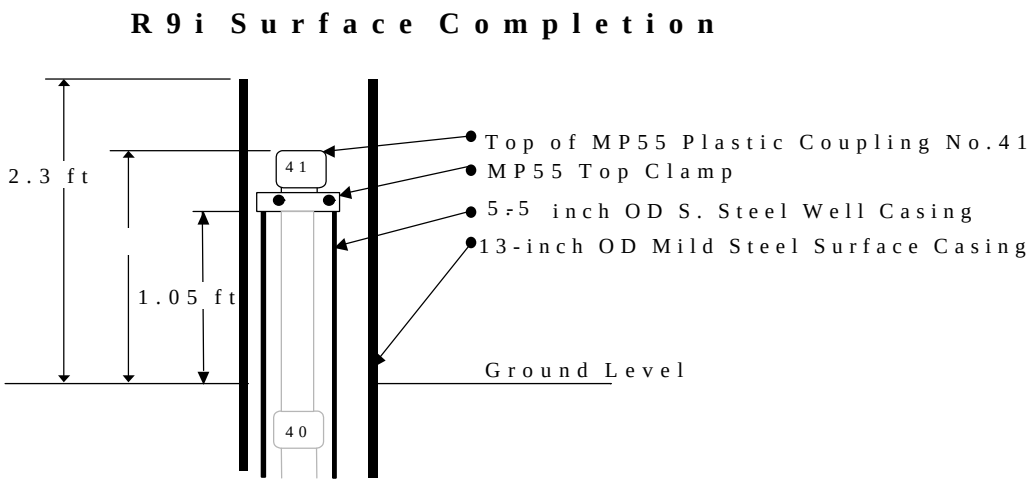

Summary MP Casing Log
LANL

Job No: WB777
Well: R9i

Legend

(Qty) MP Components

(2) 0603 - MP55 End Plug

(5) 0601M10 - MP55 Casing, PVC, 1.0m

(7) 0601M15 - MP55 Casing, PVC, 1.5m

(23) 0601M30 - MP55 Casing, PVC, 3.0m

(6) 0612M15 - MP55 Packer with stiffeners

(33) 0602 - MP55 Regular Coupling

(8) 0605 - MP55 Measurement Port

(2) 0607 - MP55 Hydraulic Pumping Port

(3) 0608 - MP55 Magnetic Location Collar

Geology

Well Screen

Backfill/Casing

Concrete

Bentonite, Sand

Sand Fine

Sand Coarse

Bentonite

Stainless Steel

Summary MP Casing Log
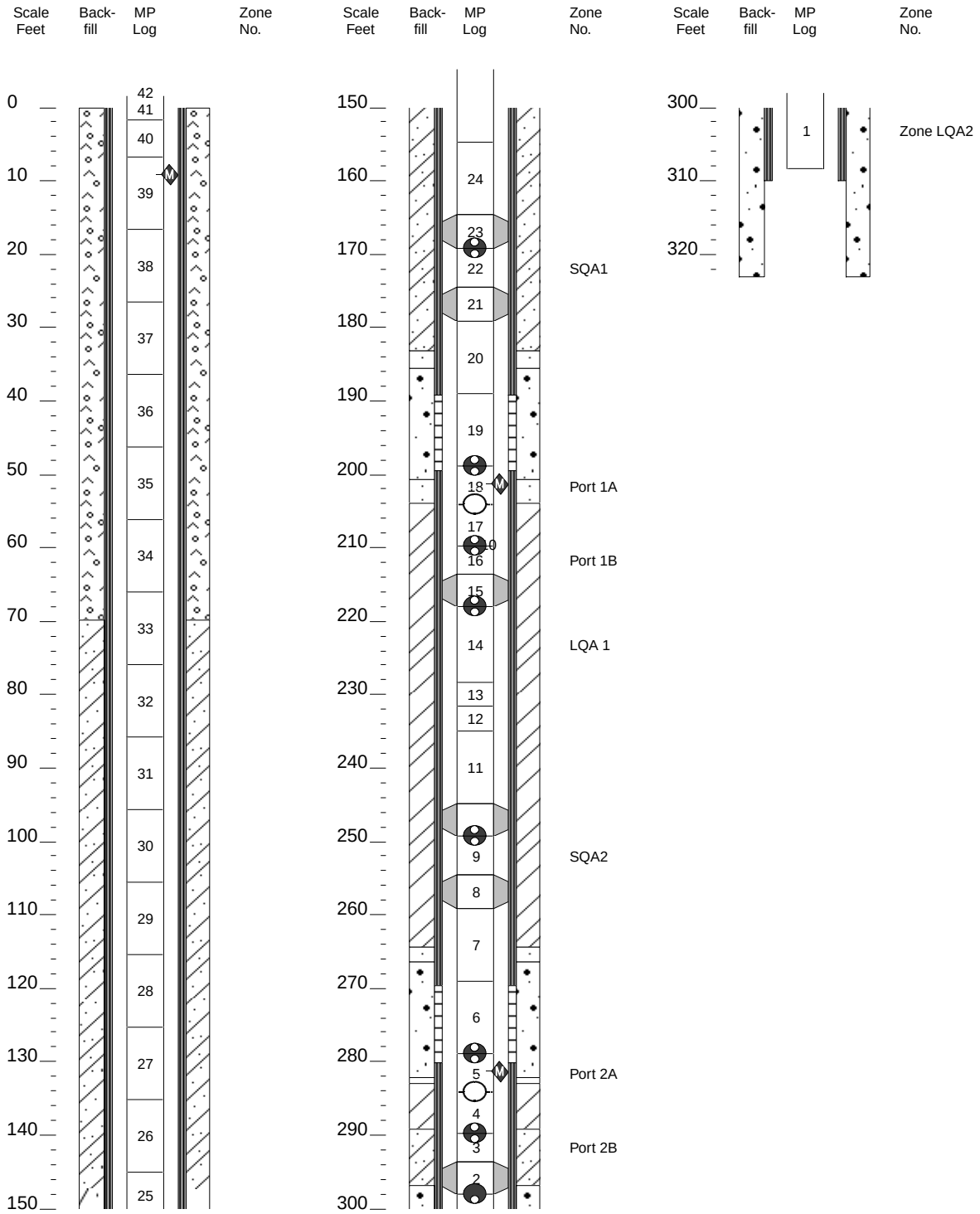
Job No: WB777
Well: R9i